A3	FIRST ANGLE	LENGTH/DIAMETER	0.5-6	>6-30	>30-120	>120-400	>400-1000	>1000-2000	>2000-4000
		TOLERANCE	± 0.1	± 0.2	± 0.3	± 0.5	± 0.8	± 1.2	± 2

RADIUS/CHAMFER	0.5-3	>3-6	>6
TOLERANCE	± 0.2	± 0.5	± 1

ANGLE (shorter side length)	0-10	>10-50	>50-120	>120-400	>400
TOLERANCE	± 1°	± 0.5°	± 0.3°	± 0.15°	± 0.1°

Z = LEG LENGTH
ANSI/AWS A2.4-98
WELDING SYMBOLS ARE USED ON THIS DRAWING. REFER TO DRAWING AAA26ADJ FOR CONVERSION TO ISO SYMBOLS.

WELDS: OTHER SIDE | ARROW SIDE

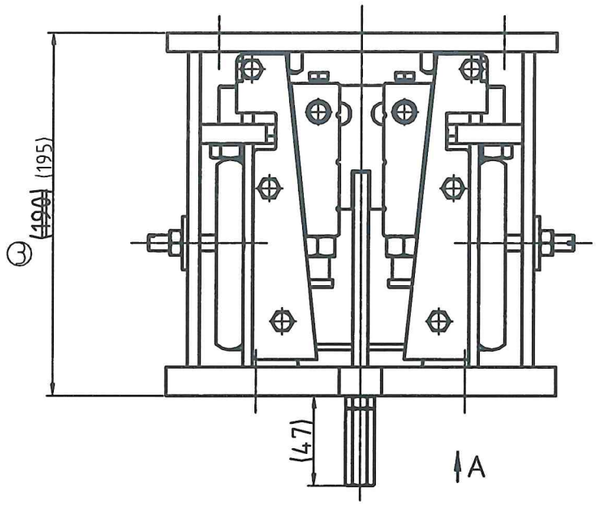

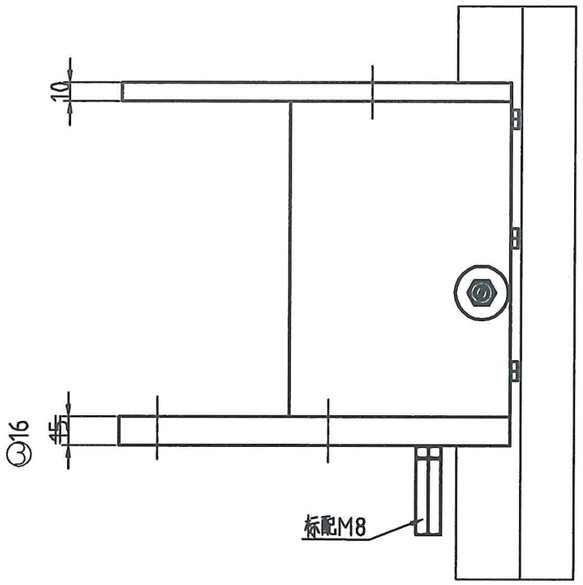

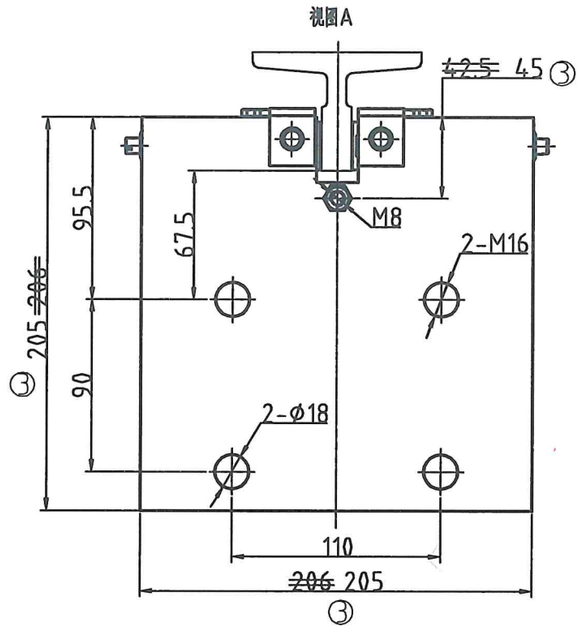

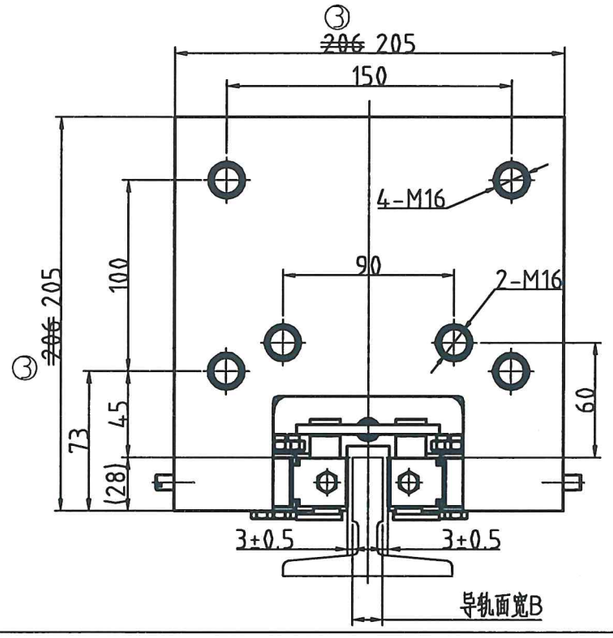

受控文件
2022-08-02

技术说明

1.本产品适用于:V=1.0~2.5 m/s,导轨面宽B为10或15.88;

P+Q=1000~4500kg

1 ~~P+Q=809~5125kg~~(具体参照型式试验报告编号:TX F320-022-14 0053);

生产时需注明要求;

2.装配时活动楔块与钳座滑动处涂上润滑油;装配后各活动部位确保灵活自如;

3.装配调整后在调整部位点上红漆.

2 4.安全钳按照GB7588中规定的试验方法进行试验,满足试验要求

5安全钳应符合GB/T10058的规定.

技术部 采购部

奥德普品牌

ALL DIMENSIONS METRIC

标记 MARK	更改原因及说明 CHANGE REASONS AND INSTRUCTIONS	更改日期 CHANGE DATE	更改 CHANGE	审查 CHECK	版本 VERSION
③	修改尺寸	20220725	闫世英	王勇新	22701
②	增加技术要求第4 条和第5条	20201102	闵传宏	唐玉婷	20B01
①	型式试验报告适用范围缩小	20170815	张佳明	闵传宏	7801

Volkslift Schindler

绘图 DRAWN	张佳明
校对 CHK	闵传宏
批准 APPD	徐勇
日期 DATE	20141013

OX-188单提拉安全钳
(沃克斯品牌)

材料: 宁波奥德普
MATERIAL:

VKS3H030

首次下发版本 FIRST VERSION	重量 WEIGHT	比例 PROPORTION
4A01		1:3
SHEETS 2	2	SHEET

A3 第一线角

基础尺寸	0.5-6	>6-30	>30-120	>120-400	>400-1000	>1000-2000	>2000-4000
公　差	±0.1	±0.2	±0.3	±0.5	±0.8	±1.2	±2

棚射切割	>0.5-3	>3-6	>6
公　差	±0.2	±0.5	±1

角度(短边)	0-10	>10-50	>50-120	>120-400	>400
公　差	±1°	±0.5°	±0.3°	±0.15°	±0.1°

焊接

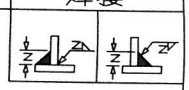

OX-188单提拉安全钳参数表

件号	速度(m/s)	适用(P+Q)范围(kg)	导轨宽度B(mm)
~~VKS3H030001~~		~~810<P+Q≤1000~~	~~10~~
VKS3H030002		1000<P+Q≤1200	10
VKS3H030003		1200<P+Q≤1400	10
VKS3H030004		1400<P+Q≤1600	10
VKS3H030005		1600<P+Q≤1800	10
VKS3H030006		1800<P+Q≤2000	10
VKS3H030007		2000<P+Q≤2200	10
VKS3H030008		2200<P+Q≤2400	10
~~VKS3H030009~~		~~810<P+Q≤1000~~	~~15.88~~
VKS3H030010		1000<P+Q≤1200	15.88
VKS3H030011		1200<P+Q≤1400	15.88
VKS3H030012		1400<P+Q≤1600	15.88
VKS3H030013		1600<P+Q≤1800	15.88
VKS3H030014		1800<P+Q≤2000	15.88
VKS3H030015		2000<P+Q≤2200	15.88
VKS3H030016		2200<P+Q≤2400	15.88
VKS3H030017		2400<P+Q≤2600	15.88
VKS3H030018		2600<P+Q≤2800	15.88
VKS3H030019	1.0	2800<P+Q≤3000	15.88
VKS3H030020		3000<P+Q≤3200	15.88
VKS3H030021		3200<P+Q≤3400	15.88
VKS3H030022		3400<P+Q≤3600	15.88
VKS3H030023		3600<P+Q≤3800	15.88
VKS3H030024		3800<P+Q≤4000	15.88
VKS3H030025		4000<P+Q≤4200	15.88
VKS3H030026		4200<P+Q≤4500	15.88
~~VKS3H030027~~		~~4400<P+Q≤4600~~	~~15.88~~
~~VKS3H030028~~		~~4600<P+Q≤4800~~	~~15.88~~
~~VKS3H030029~~		~~4800<P+Q≤5000~~	~~15.88~~
VKS3H030201		2400<P+Q≤2600	10
VKS3H030202		2600<P+Q≤2800	10
VKS3H030203		2800<P+Q≤3000	10
VKS3H030204		3000<P+Q≤3200	10
VKS3H030205		3200<P+Q≤3400	10
VKS3H030206		3400<P+Q≤3600	10
VKS3H030207		3600<P+Q≤3800	10
VKS3H030208		3800<P+Q≤4000	10

件号	速度(m/s)	适用(P+Q)范围(kg)	导轨宽度B(mm)
~~VKS3H030030~~		~~810<P+Q≤1000~~	~~10~~
VKS3H030031		1000<P+Q≤1200	10
VKS3H030032		1200<P+Q≤1400	10
VKS3H030033		1400<P+Q≤1600	10
VKS3H030034		1600<P+Q≤1800	10
VKS3H030035		1800<P+Q≤2000	10
VKS3H030036		2000<P+Q≤2200	10
VKS3H030037		2200<P+Q≤2400	10
~~VKS3H030038~~		~~810<P+Q≤1000~~	~~15.88~~
VKS3H030039		1000<P+Q≤1200	15.88
VKS3H030040		1200<P+Q≤1400	15.88
VKS3H030041		1400<P+Q≤1600	15.88
VKS3H030042		1600<P+Q≤1800	15.88
VKS3H030043		1800<P+Q≤2000	15.88
VKS3H030044		2000<P+Q≤2200	15.88
VKS3H030045		2200<P+Q≤2400	15.88
VKS3H030046		2400<P+Q≤2600	15.88
VKS3H030047		2600<P+Q≤2800	15.88
VKS3H030048	1.5	2800<P+Q≤3000	15.88
VKS3H030049		3000<P+Q≤3200	15.88
VKS3H030050		3200<P+Q≤3400	15.88
VKS3H030051		3400<P+Q≤3600	15.88
VKS3H030052		3600<P+Q≤3800	15.88
VKS3H030053		3800<P+Q≤4000	15.88
VKS3H030054		4000<P+Q≤4200	15.88
VKS3H030055		4200<P+Q≤4500	15.88
~~VKS3H030056~~		~~4400<P+Q≤4600~~	~~15.88~~
~~VKS3H030057~~		~~4600<P+Q≤4800~~	~~15.88~~
~~VKS3H030058~~		~~4800<P+Q≤5000~~	~~15.88~~
VKS3H030209		2400<P+Q≤2600	10
VKS3H030210		2600<P+Q≤2800	10
VKS3H030211		2800<P+Q≤3000	10
VKS3H030212		3000<P+Q≤3200	10
VKS3H030213		3200<P+Q≤3400	10
VKS3H030214		3400<P+Q≤3600	10
VKS3H030215		3600<P+Q≤3800	10
VKS3H030216		3800<P+Q≤4000	10

件号	速度(m/s)	适用(P+Q)范围(kg)	导轨宽度B(mm)
~~VKS3H030059~~		~~810<P+Q≤1000~~	~~10~~
VKS3H030060		1000<P+Q≤1200	10
VKS3H030061		1200<P+Q≤1400	10
VKS3H030062		1400<P+Q≤1600	10
VKS3H030063		1600<P+Q≤1800	10
VKS3H030064		1800<P+Q≤2000	10
VKS3H030065		2000<P+Q≤2200	10
VKS3H030066		2200<P+Q≤2400	10
VKS3H030067		~~810<P+Q≤1000~~	~~15.88~~
VKS3H030068		1000<P+Q≤1200	15.88
VKS3H030069		1200<P+Q≤1400	15.88
VKS3H030070		1400<P+Q≤1600	15.88
VKS3H030071		1600<P+Q≤1800	15.88
VKS3H030072		1800<P+Q≤2000	15.88
VKS3H030073		2000<P+Q≤2200	15.88
VKS3H030074		2200<P+Q≤2400	15.88
VKS3H030075		2400<P+Q≤2600	15.88
VKS3H030076		2600<P+Q≤2800	15.88
VKS3H030077	1.75	2800<P+Q≤3000	15.88
VKS3H030078		3000<P+Q≤3200	15.88
VKS3H030079		3200<P+Q≤3400	15.88
VKS3H030080		3400<P+Q≤3600	15.88
VKS3H030081		3600<P+Q≤3800	15.88
VKS3H030082		3800<P+Q≤4000	15.88
VKS3H030083		4000<P+Q≤4200	15.88
VKS3H030084		4200<P+Q≤4500	15.88
~~VKS3H030085~~		~~4400<P+Q≤4600~~	~~15.88~~
~~VKS3H030086~~		~~4600<P+Q≤4800~~	~~15.88~~
~~VKS3H030087~~		~~4800<P+Q≤5000~~	~~15.88~~
VKS3H030217		2400<P+Q≤2600	10
VKS3H030218		2600<P+Q≤2800	10
VKS3H030219		2800<P+Q≤3000	10
VKS3H030220		3000<P+Q≤3200	10
VKS3H030221		3200<P+Q≤3400	10
VKS3H030222		3400<P+Q≤3600	10
VKS3H030223		3600<P+Q≤3800	10
VKS3H030224		3800<P+Q≤4000	10

件号	速度(m/s)	适用(P+Q)范围(kg)	导轨宽度B(mm)
~~VKS3H030088~~		~~810<P+Q≤1000~~	~~10~~
VKS3H030089		1000<P+Q≤1200	10
VKS3H030090		1200<P+Q≤1400	10
VKS3H030091		1400<P+Q≤1600	10
VKS3H030092		1600<P+Q≤1800	10
VKS3H030093		1800<P+Q≤2000	10
VKS3H030094		2000<P+Q≤2200	10
VKS3H030095		2200<P+Q≤2400	10
~~VKS3H030096~~		~~810<P+Q≤1000~~	~~15.88~~
VKS3H030097		1000<P+Q≤1200	15.88
VKS3H030098		1200<P+Q≤1400	15.88
VKS3H030099		1400<P+Q≤1600	15.88
VKS3H030100		1600<P+Q≤1800	15.88
VKS3H030101		1800<P+Q≤2000	15.88
VKS3H030102		2000<P+Q≤2200	15.88
VKS3H030103		2200<P+Q≤2400	15.88
VKS3H030104		2400<P+Q≤2600	15.88
VKS3H030105		2600<P+Q≤2800	15.88
VKS3H030106	2.0	2800<P+Q≤3000	15.88
VKS3H030107		3000<P+Q≤3200	15.88
VKS3H030108		3200<P+Q≤3400	15.88
VKS3H030109		3400<P+Q≤3600	15.88
VKS3H030110		3600<P+Q≤3800	15.88
VKS3H030111		3800<P+Q≤4000	15.88
VKS3H030112		4000<P+Q≤4200	15.88
VKS3H030113		4200<P+Q≤4500	15.88
~~VKS3H030114~~		~~4400<P+Q≤4600~~	~~15.88~~
~~VKS3H030115~~		~~4600<P+Q≤4800~~	~~15.88~~
~~VKS3H030116~~		~~4800<P+Q≤5000~~	~~15.88~~
VKS3H030225		2400<P+Q≤2600	10
VKS3H030226		2600<P+Q≤2800	10
VKS3H030227		2800<P+Q≤3000	10
VKS3H030228		3000<P+Q≤3200	10
VKS3H030229		3200<P+Q≤3400	10
VKS3H030230		3400<P+Q≤3600	10
VKS3H030231		3600<P+Q≤3800	10
VKS3H030232		3800<P+Q≤4000	10

20220 6

记号	处数	更改原因及说明	更改日期	更改者	审查者	SB编号
④						
③	8	增加导轨宽度B=10的P+Q适用范围增大的相应参数	20220517	沈豪杰	闵传宏	22501
②	2	型式试验报告适用范围缩小	20170815	张佳明	闵传宏	7801
①	1	增加安全钳2.0速度时相应的参数	20150723	张佳明	陈国芳	5701

VOLKSLIFT

绘图	张佳明	
校对	闵传宏	
审核	徐勇	
日期	2014-10-13	

OX-188单提拉安全钳
(沃克斯品牌)

材料　宁波奥德普

VKS3H030

首次发布版本	数量	重量	比例
4A01			1:1
共 2 页		第 1 页	

沃克斯电梯(中国)有限公司

字	日期

底图总号

底图总号